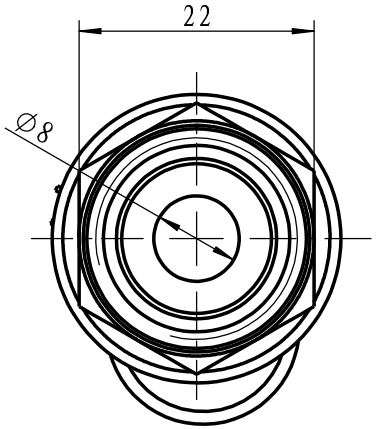

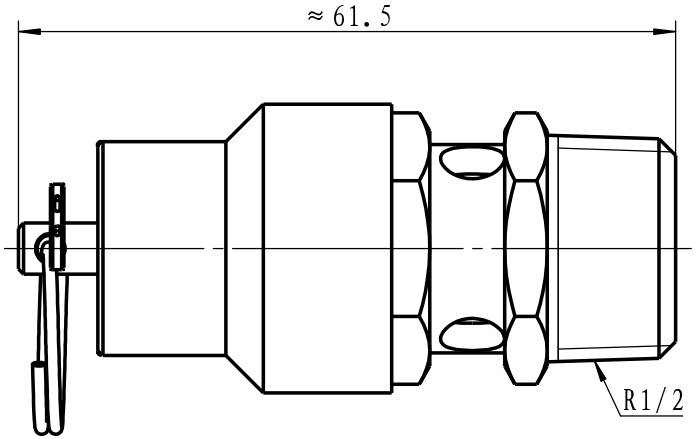

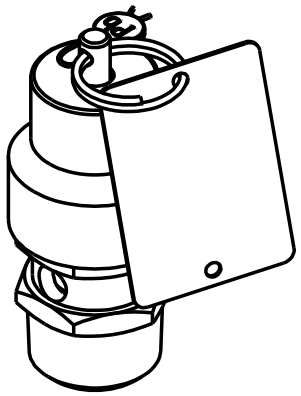

Technical parameter	
Set pressure Ps(MPa)	0.5～1.6
Descharge pressure Pd(MPa)	⩽1.1Ps
Connection thread dimension (in)	R1/2
Usable temperature (℃)	-20～120
working medium	Air

Technical Requirement:

1.The design, manufacture and inspection of safety valve are based on KS B 6216.

					Materical		Diagram	CAXD4-2.5
Mark	Points	Redirect document number	Signature	Date	Pattern	CAXD4-2.5	Name	Safety Valve
Design		Authorization			Edition	Weight	Scale	CHAOCHAO™
					1.0		2:1	Zhejiang Chaochao Safety Valve Manufacturing CO.,Ltd.
Approve					Total Page	First Page		