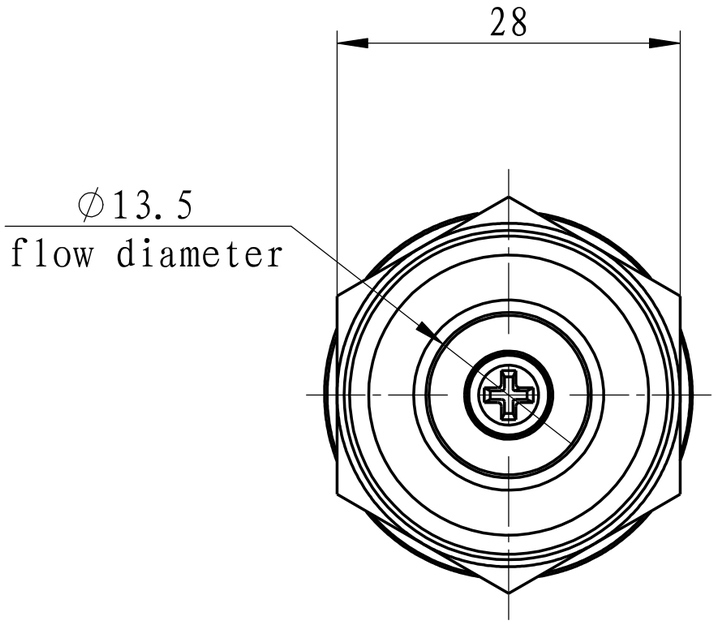

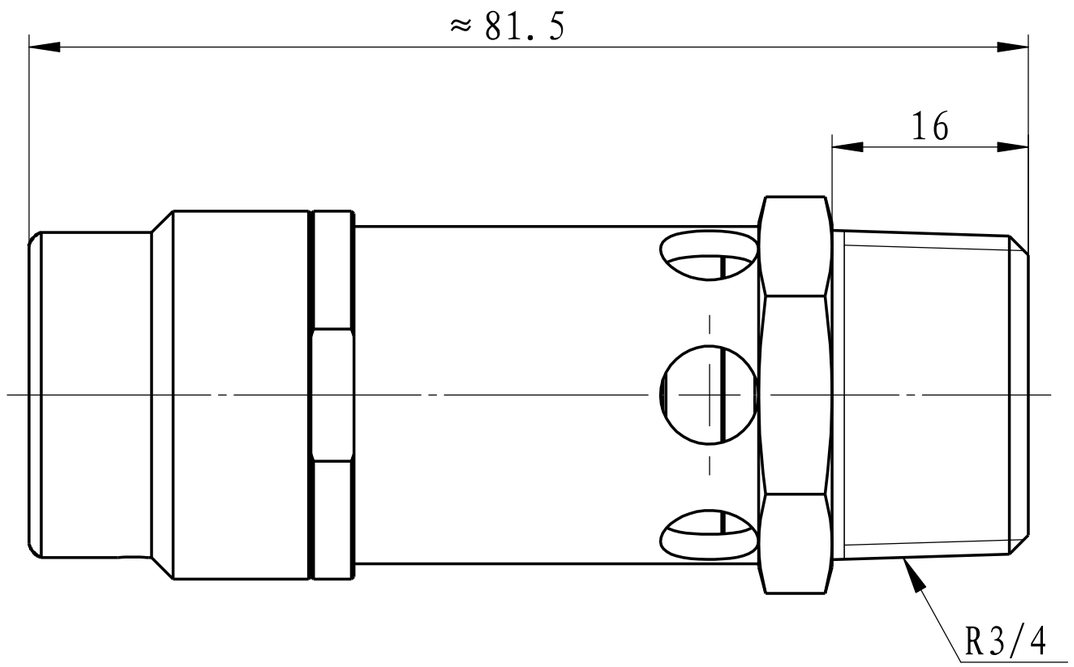

Technical parameter	
Set pressure Ps(bar)	5～16
Discharge pressure Pd(bar)	≤1.1Ps
Connection thread dimension (in)	R3/4
Coefficient of discharge K_{dr}	≥0.45
Usable temperature (℃)	-20～120
working medium	Air＋Oil/2

Technical Requirement:

1、The design, manufacture and inspection of safety valve are based on EN ISO 4126-1 and PED instruction;

					Materical		Diagram	FX6
Mark	Points	Redirect document number	Signature	Date	Type	FX6	Name	CE Safety valve
Design		Authorization			Edition	Weight	Scale	CHAOCHAO®
					1.0		2:1	Zhejiang Chaochao Safety Valve Manufacturing Co.,Ltd.
Approve					Total Page	First Page		