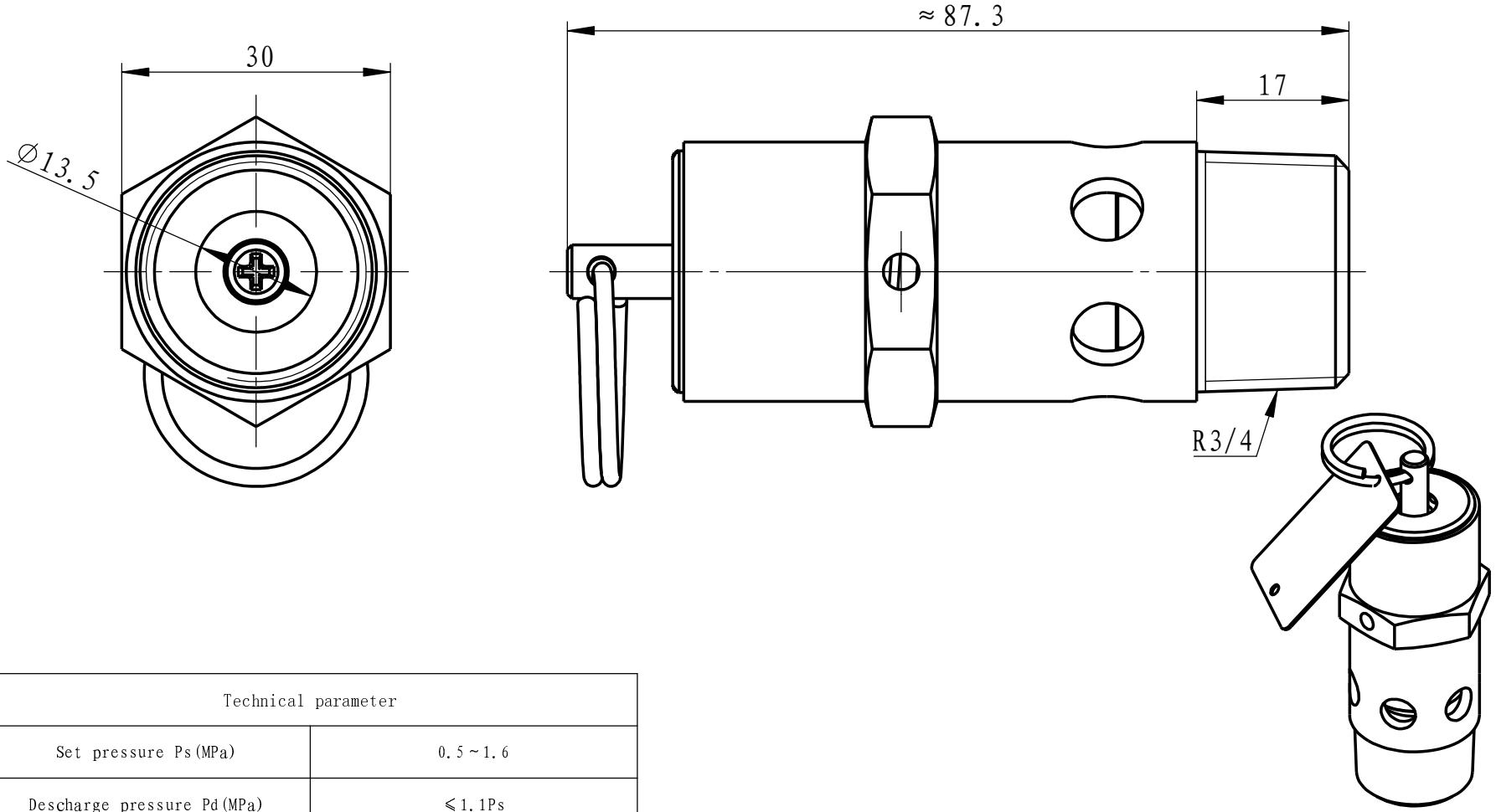

Technical parameter	
Set pressure Ps(MPa)	0.5～1.6
Descharge pressure Pd(MPa)	≤1.1Ps
Seal pressure Pt(MPa)	≥0.9Ps
Connection thread dimension (in)	R3/4
Usable temperature (℃)	-20～120
working medium	Air

Technical Requirement:

1、The design, manufacture and inspection of safety valve are based on AS1271;

					Materical		Drawing No.	CAXL6-2.5
Mark	Points	Redirect document number	Signature	Date	Type	CAXL6-2.5	Name	Safety Valve
Design		Authorization			Edition	Weight	Scale	CHAOCHAO
					1.0		2:1	Zhejiang Chaochao Safety Valve Manufacturing CO.,Ltd.
Approve					Total Page	First Page		